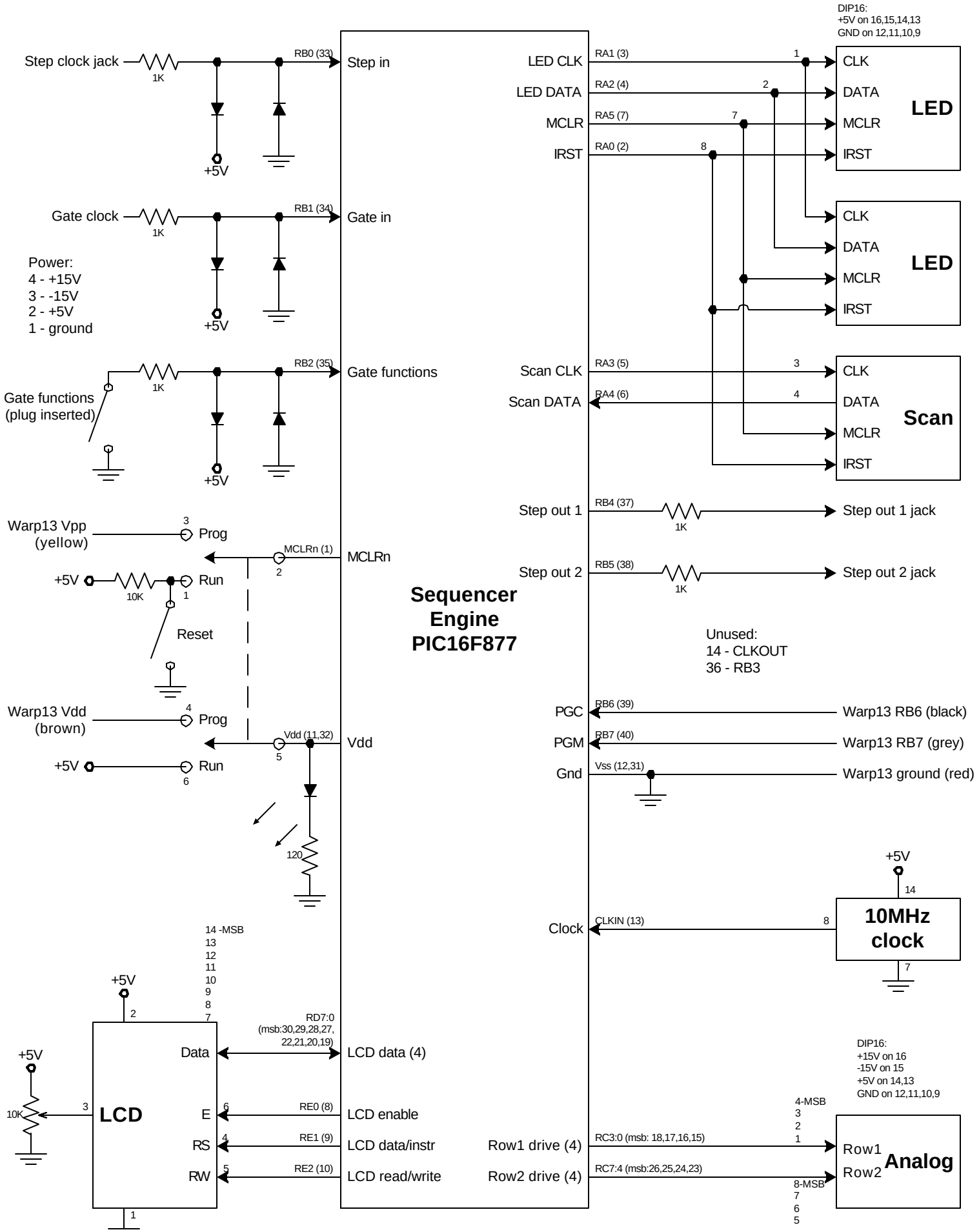


Copyright 2004 by John Speth